

ST

Welding & Asembly Positioners

HANDLING SPECIALTY

We build big things to help our customers build big things.

SINCE 1963



OPERATING IN THE MARKET FOR MORE THAN 60 YEARS, HANDLING IS A WORLD LEADER IN THE MANUFACTURING OF POSITIONERS

International Partners

HANDLING supplies the largest train-builders in the world and railway maintenance companies. Thanks to technical sales team, today HANDLING exports its equipment all over the world.

Tailor-made Products

HANDLING's products are developed to be customized according to the customer's specific requirements. HANDLING has organized its operations to plan and optimize projects, search for and implement new solutions and customize its systems to customers' specific needs.

Safety and Performance

Compliant to the MACHINE DIRECTIVE 2006/42/CE and the EUROPEAN DIRECTIVE EN 1493. Compliance with increasingly strict safety regulations and its continuous commitment to simplify the maintenance operations of vehicles lead HANDLING to use the best quality materials and cutting-edge technologies in order to guarantee the highest possible quality standards.

ST WELDING AND ASSEMBLY POSITIONERS

Handling ST are column positioners that used during welding and assembly operations of big weldments that are manufactured by companies of all sectors.

Compared to similar products, Handling positioners feature unique caractestictis such as: compact design, flexibility and lightness. Our models start from a lifting capacity of 2 Tons up 90 Tons.

Handling column positioners are built according to the customer's specific needs.

Handling manufactures the following column positioners models:

STR - Head and tailstock positioners
STS - Skyhook positioners
STF - Head and tailstock cradle-type

Most of the technical features can be customized.
Our positioners can support 4.0 Industry.

Handling positioners offer many advantages:

- Safety: reduces the need for dangerous movements while operating lifting equipment such as overhead cranes
- Health: welders and operators always maintain the correct posture and reduce fatigue
- Improved production quality: allow to work at an ideal height and in correct position
- Increased productivity: lifting and turning products without overhead cranes or ordinary cranes reduces downtimes

The fields of application in welding and assembly are the most varied:
- Truck frames and tanks
- Earth moving machines and components
- Railway bogies, train cars and frames
- Automotive and military vehicles
- Agricultural vehicles and machinery
- And many other







"Very satisfied, and great communication displayed by Handling Specialty.."

SRTEVEN LIVINGOOF - GE TRANSPORTATION

"We have had a long term relationship with HSML and have been particularily happy with the sevice and product quality during this time."

JOHN SANGER - BOMBARDIER TRANSPORTATION

Model	Code	STR20	STR40	STR60	STR80	STR100	STR120	STR150	STR200	STR250	STR300	STR450	STR600	STR750	STR900
Capacity (Ton)		2	4	6	8	10	12	15	20	25	30	45	60	75	90
Torque moment (Nm)	C1	3000	3500	5500	6000	7500	10000	15000	22000	25000	35000	45000	70000	70000	80000
Minimum height (mm)	A	350	350	450	450	500	550	550	550	700	750	800	1250	1250	1900
Lifting stroke (mm)	B	1450	1550	1500	1500	1450	1400	1450	1300	1150	1250	1450	1400	1400	1400
Maximum height (mm)	C	1800	1900	1950	1950	1950	1950	2000	1850	1850	2000	2250	2650	2650	2800
Table diameter (mm)	D	600	600	800	800	900	1000	1000	1000	1300	1450	1450	1670	1670	1900

STR HEAD AND TAILSTOCK POSITIONERS

MOBILE/FIXED MASTER COLUMN

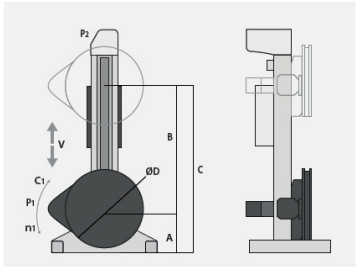

MOBILE/FIXED SLAVE COLUMN

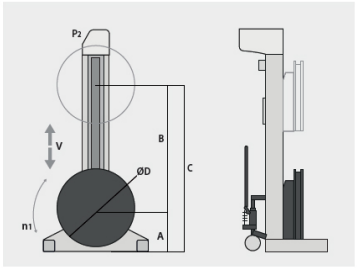

The STR head and tailstock positioner with double or single column,
allows the lifting and the rotation of any kind of weldment.
The lifting of the X axis is mechanical, generated by a gear motor and screwnut connected to the load supporting device composed of a steel bracket. The rotation of the Y axis is mechanical, generated by a gear motor coupled with a self-braking motor.
All the controls are on the control unit and on the hand held remote, which are both installed on master column.

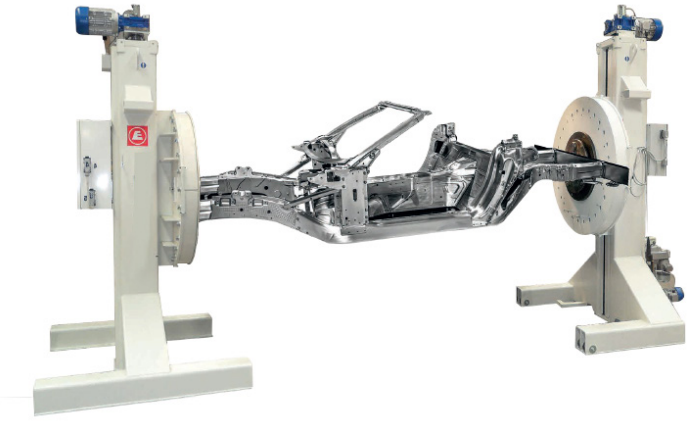

The STR is available in 4 different versions:

- M, two columns one fixed and one movable
- F, two columns both fixed
- MM, two movable columns of which one must be fixed to the ground
- /1, one fixed column

Versions available that feature only rotation or only lifting.



STS SKYHOOK POSITIONERS

The STS skyhook positioners are single column fixed positioners, that allow the lifting and the rotation of any kind of frame.
The Handling SWS Skyhook positioners are an excellent solution in applications in which it is required the complete rotation of all 3 axis that need to be easily reached during the welding or assembly procedures.

The lifting of the X axis is mechanical, generated by a gear motor and screw-nut connected to the load supporting device composed of a steel bracket.
The rotation of the Y and Z axis is mechanical, generated by a gear motor coupled with a self-braking motor.
All the controls are on the control unit and on the hand held remote, which are both installed on master column.

Model	Code	STS05	STS10	STS15
Capacity (Ton)		0,5	1	1,5
Torque moment (Nm)	C1	5500	7500	7500
Torque moment (Nm)	C2	3500	3500	5500
Rotation speed (rpm)	N1	0,3 ÷ 0,9	0,3 ÷ 0,9	0,3 ÷ 0,8
Rotation speed (rpm)	N2	0,4 ÷ 0,8	0,4 ÷ 0,8	0,3 ÷ 0,9
Lifting speed (mm/min)	V	570	570	660
Minimum height (mm)	A	800	800	850
Lifting stroke (mm)	B	1100	1150	1150
Maximum height (mm)	C	1900	1950	2000
Plate diameter (mm)	D	424	600	800
Maximum outreach (mm)	E	1500	1500	1500
Minimum height from the plate (mm)	G	380	450	500
Maximum height from the plate (mm)	H	2340	2500	2350
Distance of the plate from the rotation axis (mm)	I	420	350	350
Electric motor power (kW)	P1	0,55	1,1	1,1
Electric motor power (kW)	P2	0,55	0,55	0,55
Electric motor power (kW)	P3	1,85	2,2	2,2

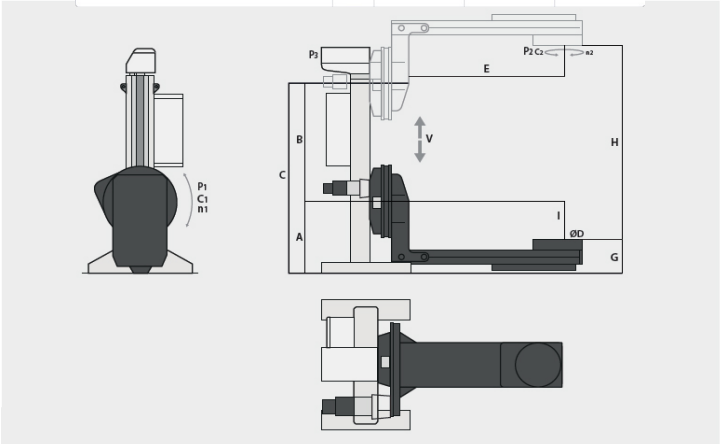



STF HEAD AND TAILSTOCK CRADLE-TYPE

The STF head and tailstock cradle-type is a double column fixed machine a with central saddle, that allows the lifting and the rotation of any kind of frame.

The lifting of the X axis is mechanical, generated by a gear motor and screwnut connected to the loadsupporting device composed of a steel bracket.

The rotation of the Y and Z axis is mechanical, generated by a gear motor coupled with a self-braking motor.
All the controls are on the control unit and on the hand held remote, which are installed on the master column or a wheeled trolley.

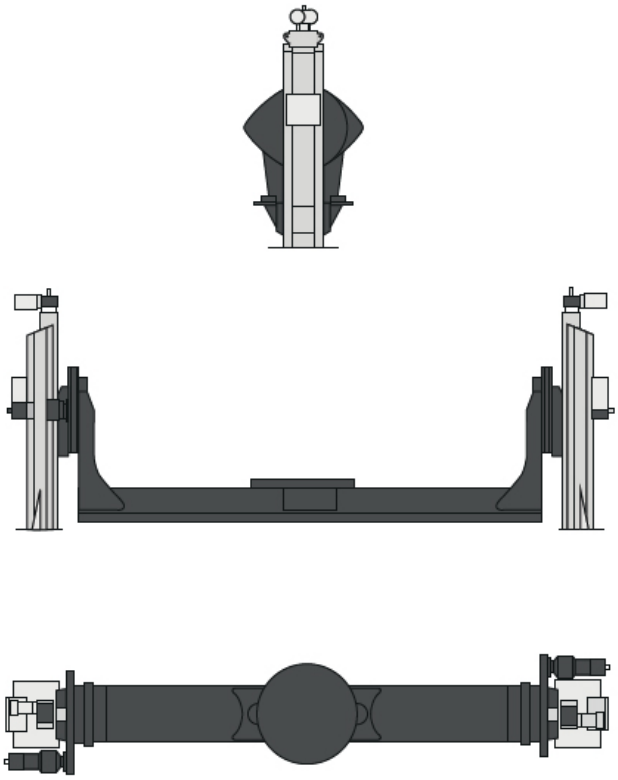

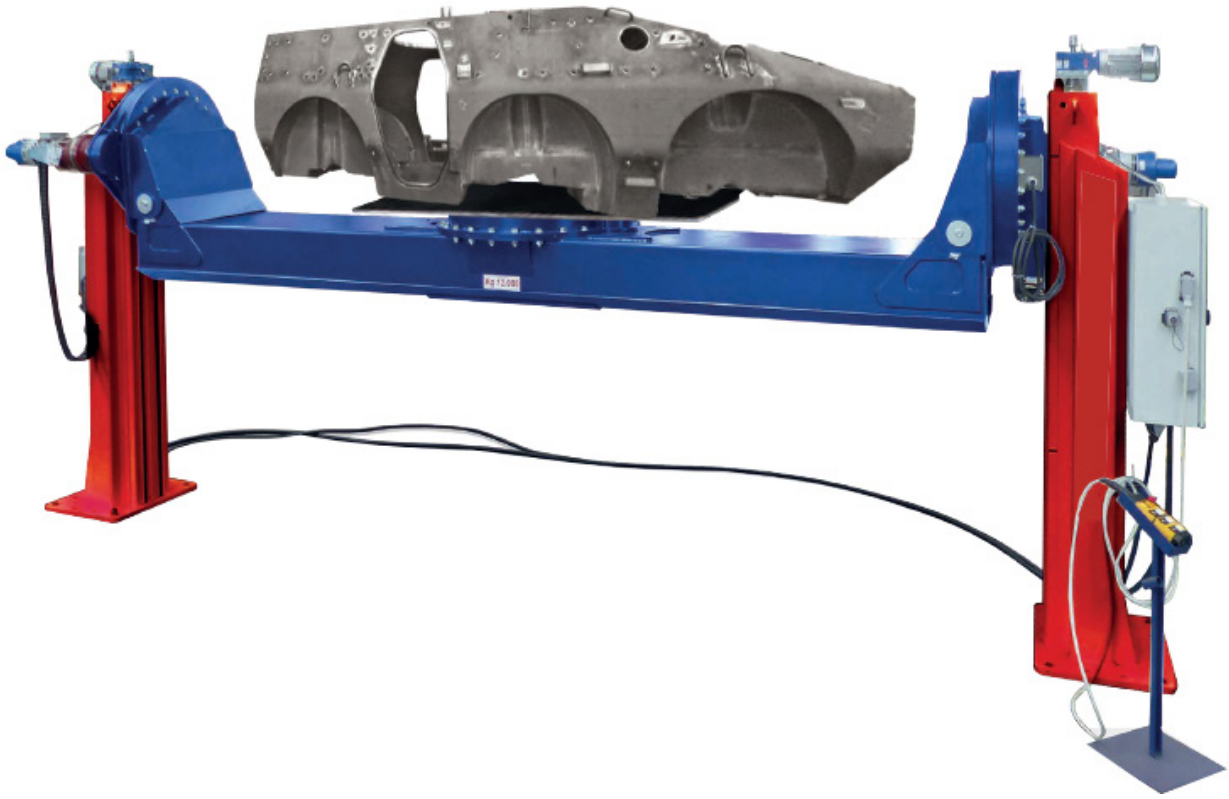

SOME OF OUR OPTIONS

- Rotary ground: 400A-800A-1200A
- Double motor for rotation
- Foot switch for left/right rotation
- Block of the slave carriage
- Wireless safety remote control
- Safety laser scanners
- Motorized displacment system three phase or battery operated
- Auxilliary rail displacement system manual or motorized
- Smart interface
- 4.0 Industry.







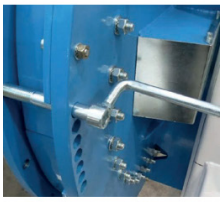





Marek Cybula
Sr. Technical Sales Representative
O: 905-945-9661 X 261
C: 905-971-5608
mcybula@handling.com

HANDLING SPECIALTY

www.handling.com • 1-800-559-8366
219 South Service Rd W., Grimsby, Ontario, Canada L3M 1Y6

CE CSA GROUP CWB CERTIFIED ISO MHI Professional Engineers Ontario